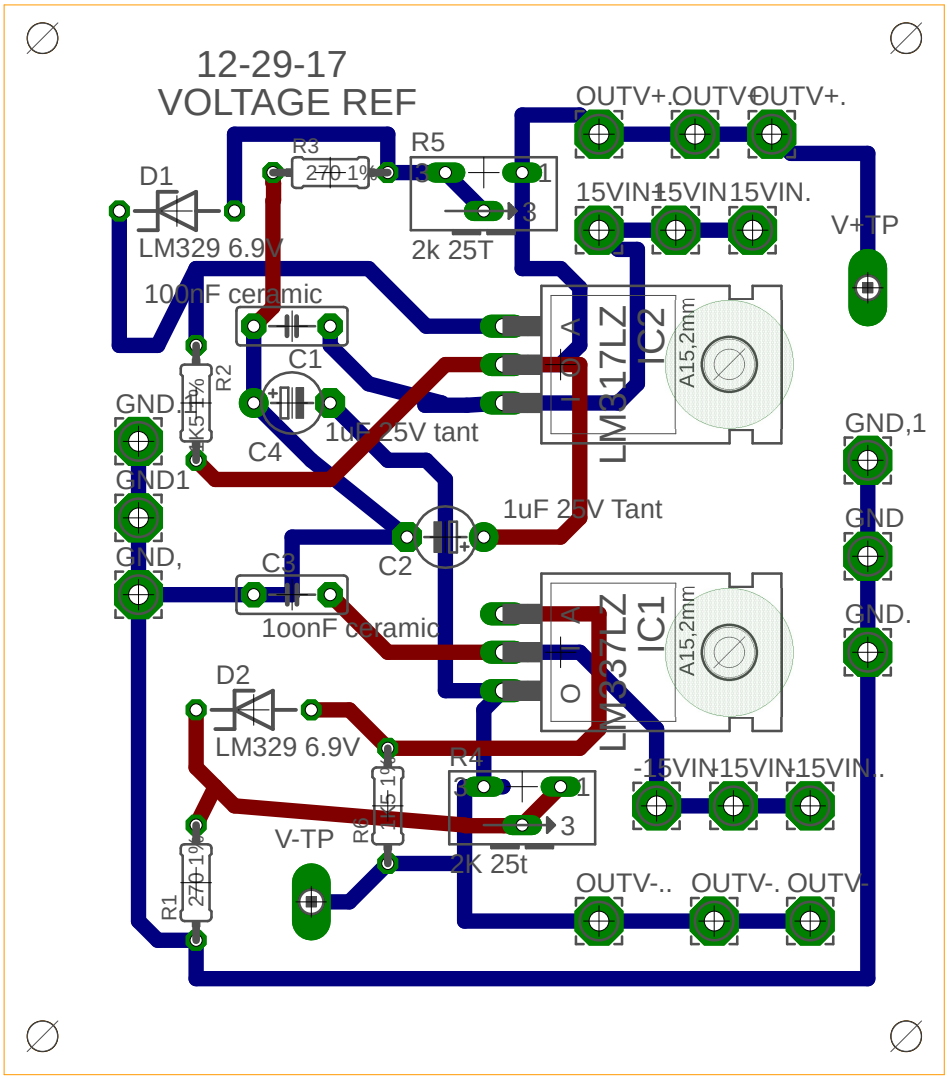
12-29-17
VOLTAGE REF
D1
LM329 6.9V
R3
270 1%
R5
2k 25T
OUTV+.
OUTV+
OUTV+.
15VIN
15VIN
15VIN.
V+TP
100nF ceramic
C1
R2
5k 1%
GND.
C4
1uF 25V tant
GND1
GND,
C3
1oonF ceramic
C2
1uF 25V Tant
LM317LZ
IC2
A15,2mm
GND,1
GND
GND.
LM337LZ
IC1
A15,2mm
D2
LM329 6.9V
R4
2K 25t
R6 10k
R7
V-TP
R1
270 1%
-15VIN
-15VIN
-15VIN..
OUTV-..
OUTV-.
OUTV-