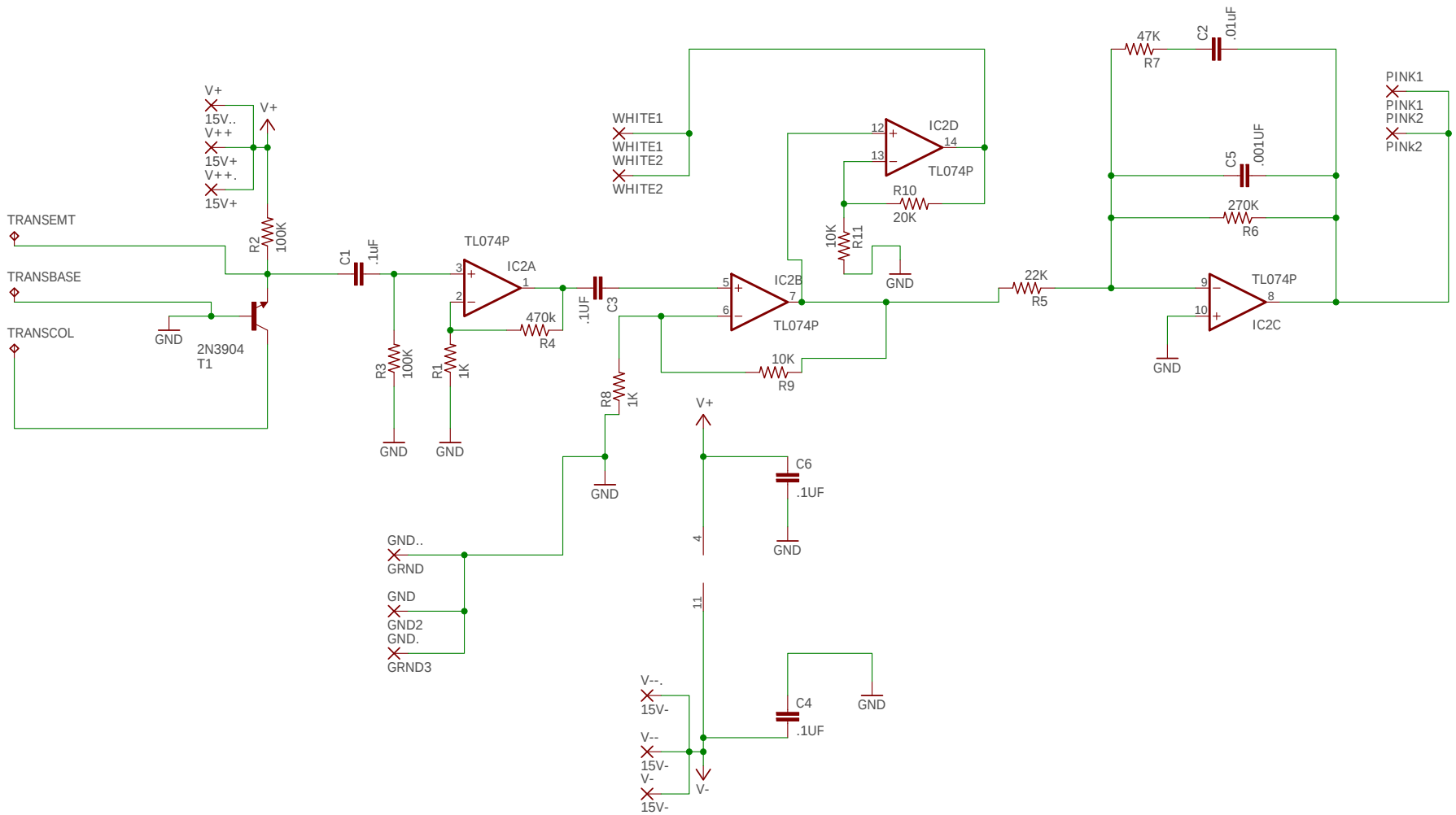

12/20/2017 4:08 PM f=0.90 C:\Users\clamm\Dropbox\eagle\noise\noise4.sch (Sheet: 1/1)